DocuSign Envelope ID: C8247027-8A8E-460C-8D0B-473637FCB451

PROJECT REFERENCE NO.	SHEET NO.
17BP.14.R.109	2
R/W SHEET NO.	
ROADWAY DESIGN ENGINEER	PAVEMENT DESIGN ENGINEER
8/4/2016	8/4/2016

NORTH CAROLINA PROFESSIONAL SEAL 27933 ENGINEER R. D. ODELL

NORTH CAROLINA PROFESSIONAL SEAL 16003 ENGINEER DEAN A. HATFIELD

DocuSigned by: RD Odell

DocuSigned by: Dean Hatfield

DOCUMENT NOT CONSIDERED FINAL UNLESS ALL SIGNATURES COMPLETED

N.T.S.

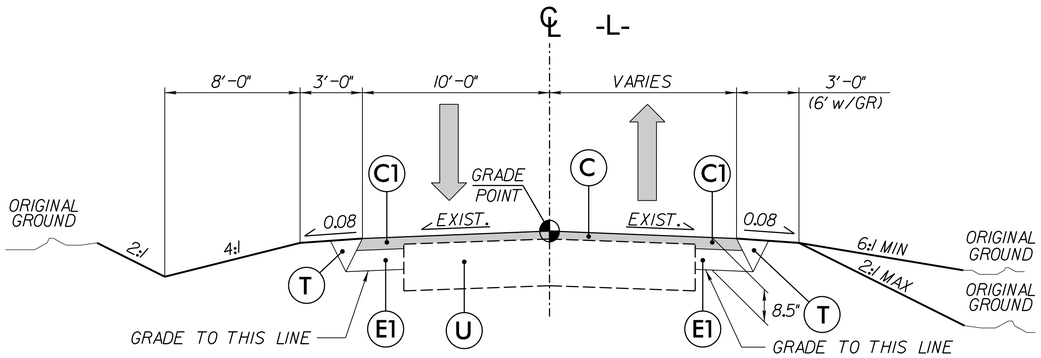

TYPICAL SECTION No. 1

–L– STA 10+05.00 TO –L– STA 10+90.00
–L– STA 14+00.00 TO –L– STA 14+88.78

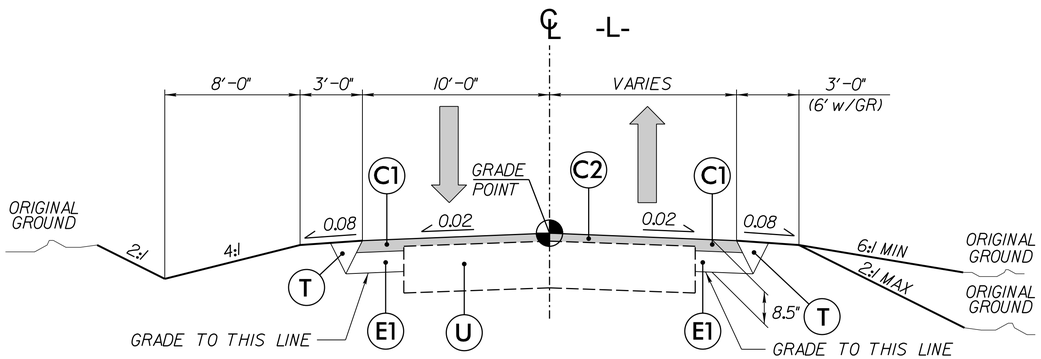

TYPICAL SECTION No. 2

–L– STA 10+90.00 TO –L– STA 11+90.00
–L– STA 12+90.00 TO –L– STA 14+00.00

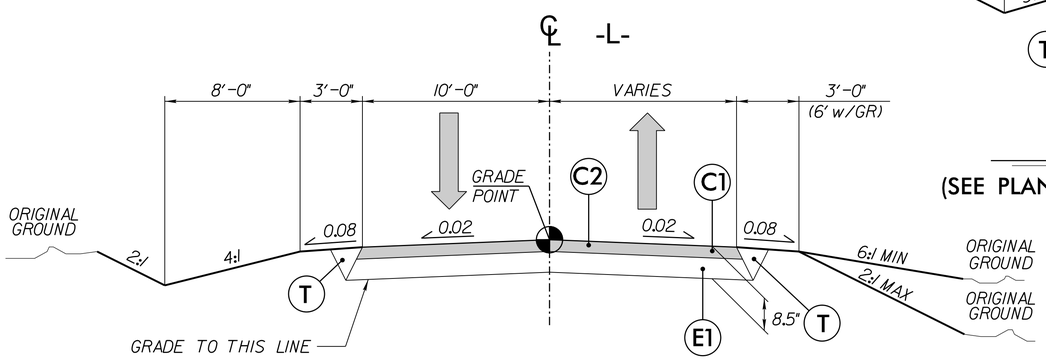

TYPICAL SECTION No. 3

–L– STA 11+90.00 TO –L– STA 12+14.00 (BEGIN BRIDGE)
–L– STA 12+56.60 (END BRIDGE) TO –L– STA 12+90.00

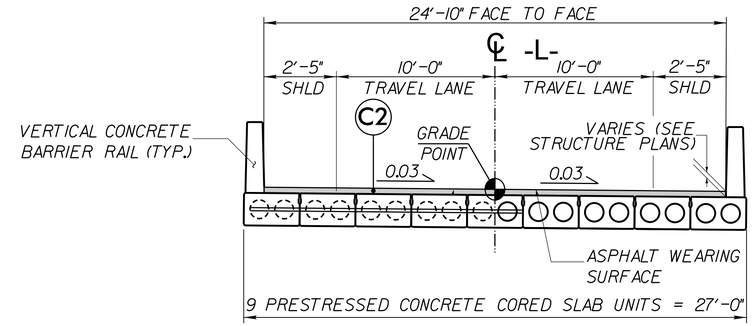

TYPICAL SECTION ON STRUCTURE

–L– STA 12+14.00 (BEGIN BRIDGE) TO –L– STA 12+56.60 (END BRIDGE)

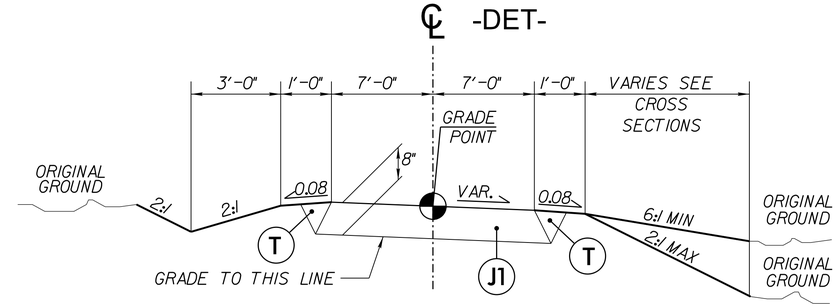

DETOUR TYPICAL SECTION

–DET– STA 11+50.66 TO –DET– STA 15+46.74

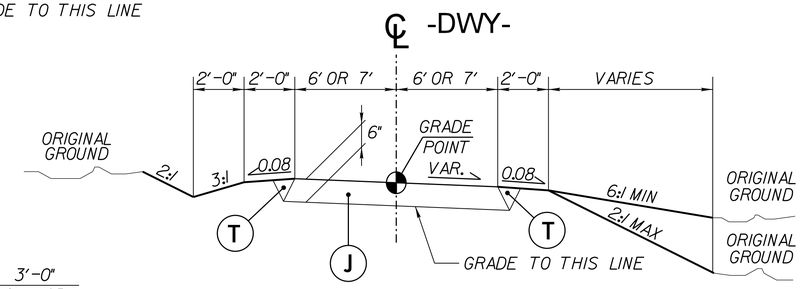

DRIVEWAY DETAIL

(SEE PLANS FOR DWY LOCATIONS & WIDTHS)

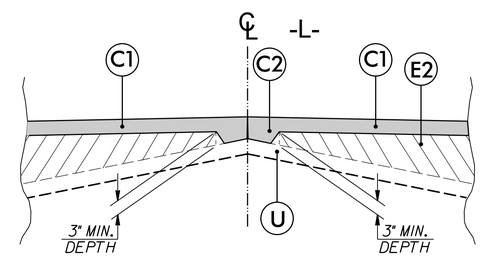

DETAIL SHOWING METHOD OF WEDGING

Note: Pavement edge slopes are 1:1 unless shown otherwise.

PAVEMENT SCHEDULE	
ITEM	DESCRIPTION
C	Prop. Approx 1.5" Asphalt Concrete Surface Course, Type S9.5B, at an Average Rate of 168 lbs. Per sq. yard.
C1	Prop. Approx 3.0" Asphalt Concrete Surface Course, Type S9.5B, at an Average Rate of 168 lbs. Per sq. yard in each of two layers.
C2	Prop. Var. Depth Asphalt Concrete Surface Course, Type S9.5B, at an Average Rate of 112 lbs. Per sq. yard Per 1" Depth, to be placed in layers not less than 1.5" or greater than 2" in depth.
E1	Prop. Approx 5.5" Asphalt Concrete Base Course, Type B25.0B, at an Average Rate of 627 lbs. Per sq. yard.
E2	Prop. Var. Depth Asphalt Concrete Base Course, Type B25.0B, at an Average Rate of 114 lbs. Per sq. yard Per 1" Depth, to be placed in layers not less than 4" or greater than 5.5" in depth.
J	Prop. 6" Aggregate Base Course.
J1	Prop. 8" Aggregate Base Course.
T	Earth Material
U	Existing Pavement
W	Var. Depth Asphalt Pavement

REVISIONS

DATE PRINTED: 6/8/2016 4:29:25 PM
G:\CKE Projects\CKE21004 Limited Services Division Offices\Group 3\550310\Roadway\Proj\550310_RDY_02_TYP.dgn
G:\CADD\Plot\CKE21004\CKE21004.rdsk5